Feb. 7, 1939. H. D. BELLIN 2,146,613

SMOKING DEVICE

Filed Feb. 16, 1938

Fig. 1.

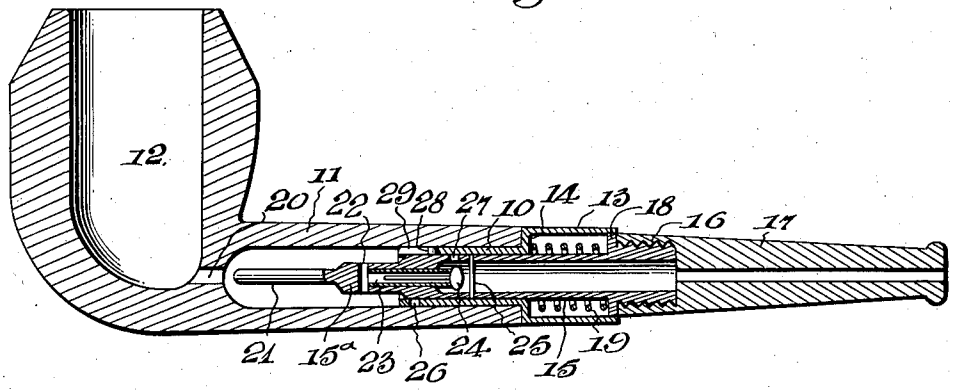

Fig. 2.

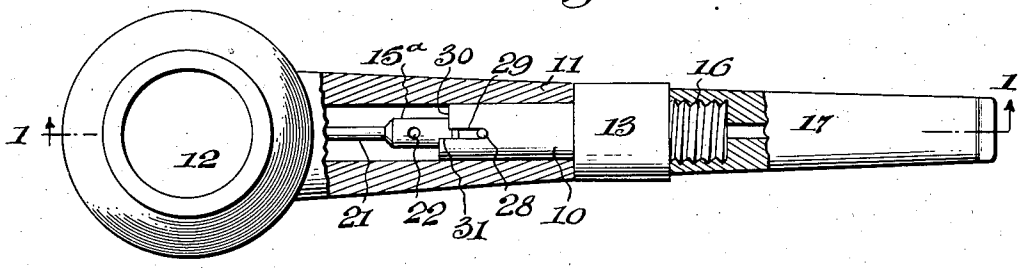

Fig. 5.

Fig. 3.

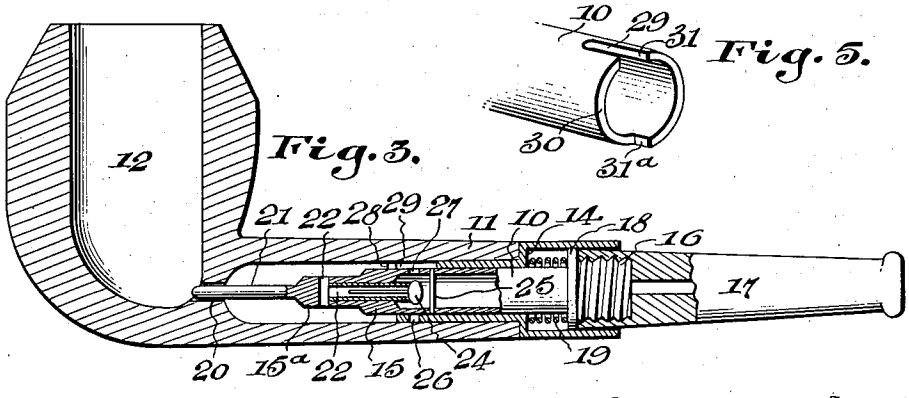

Fig. 4.

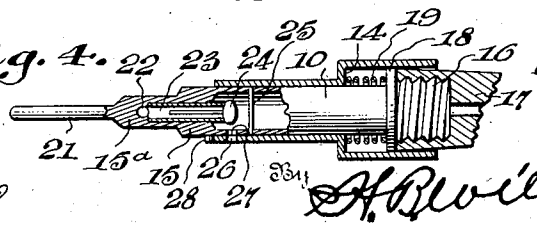

Inventor

H. D. Bellin

WITNESS

H. Woodard

By H. Robinson & Co

Attorneys

Patented Feb. 7, 1939 2,146,613

UNITED STATES PATENT OFFICE

2,146,613

SMOKING DEVICE

Henry D. Bellin, Providence, R. I., assignor to August A. Thomen, New York, N. Y.

Application February 16, 1938, Serial No. 190,857

4 Claims. (Cl. 131—215)

The invention relates to new and useful improvements in pipes and the like for smokers' use.

One object of the invention is to make novel provision whereby the usual communicating opening between the bowl and stem of a pipe may be quickly and easily cleaned whenever necessary, simply by pushing forwardly upon the mouth-piece of the pipe.

A further object is to make novel provision whereby saliva cannot reach the bowl and whereby any accumulated saliva may be readily blown out, overcoming well known drawbacks heretofore encountered.

A still further object is to provide a construction which will be comparatively simple and inexpensive, yet efficient, desirable, and durable.

With the foregoing in view, the invention resides in the novel subject matter hereinafter described and claimed, description being accomplished by reference to the accompanying drawing.

Fig. 1 is a longitudinal sectional view on line 1—1 of Fig. 2 showing the parts in smoking position.

Fig. 2 is a top plan view partly in horizontal section, with the parts positioned as in Fig. 1.

Fig. 3 is a view similar to Fig. 1 but showing the parts positioned to clean out the communicating opening between the bowl and stem.

Fig. 4 is a detail sectional view, partly in elevation, showing the parts in saliva-blow-out position.

Fig. 5 is a fragmentary front perspective view of one of the tubes.

In the drawing above briefly described, a preferred construction has been illustrated, and while this construction will be specifically explained, it is to be understood that within the scope of the invention as claimed, variations may be made.

The numeral 10 denotes an outer metal tube for insertion into the usual stem 11 which is connected in the usual way with the pipe bowl 12. At its rear end, the tube 10 is provided with a tubular enlargement 13 having a front wall 14 to abut the rear end of the stem 11, the front end of said tube 10 and the rear end of said enlargement 13 being both open.

A smoke-conducting and saliva-collecting tube 15 passes slidably and rotatably through the tube 10, the rear end of said tube 15 having appropriate provision, such as screw threads 16 for connecting it with the front end of a mouth-piece 17. The tube 15 is provided with a wall 18 abutting the front end of this mouth-piece and closing the rear end of the tubular enlargement 13 of the outer tube 10. Between this wall 18 and the wall 14 of the enlargement 13, a coiled compression spring 19 surrounds the tube 15 to normally hold this tube in a normal rearward position. When the mouth-piece 17 is pushed forwardly, however, the spring 19 compresses and the tube 15 slides forwardly. This provision is made for two reasons. It effects cleaning-out of the usual communicating opening 20 between the bowl 12 and the stem 11, in a manner hereinafter explained, and it unlocks tube 15 from a normal fixed relation with tube 10, permitting rotation of said tube 15 to a saliva-blow-out position, as also explained hereinafter.

In the present disclosure, the front end of the tube 15 is reduced as shown at 15a and is provided with a forwardly projecting pin 21 which normally occupies a position behind the opening 20. However, when the tube 15 is slid forwardly by pushing upon the mouth-piece 17, this pin 21 enters the opening 20 to effectively clean-out said opening and permit free passage of smoke therethrough, the cleaning operation being quickly and easily performed whenever necessary.

I have illustrated a transverse smoke passage 22 in the reduced tube end 15a, and a longitudinal smoke passage 23 leading from said passage 22 into the main interior portion of the tube 15, said passage 23 being preferably in the form of a small tube projecting rearwardly to some extent into said main interior portion of said tube 15. Slidable in the passage or tube 23 is a forwardly closing check valve 24, the opening movement of which is limited by a pin or the like 25. While the valve 24 freely opens rearwardly to admit smoke into the tube 15, it closes forwardly to prevent any saliva reaching the pipe bowl. This saliva may be discharged from time to time as will now be explained.

The lower side of the outer tube 10 is formed with a saliva-blow-out opening 26 and the upper side of the tube 15 is provided with a similar opening 27 for registration with said opening 26 when said tube 15 is slid forwardly to a predetermined extent and rotated to a predetermined extent. This is, of course, done when the tube 10 is withdrawn from the pipe stem 11 and any accumulated saliva may then be easily blown out of said tube 15. The parts are then restored to normal and the tube 10 again inserted into the stem 11.

For normally locking the tubes 10 and 15

against relative rotation and for limiting the relative rotation of said tubes to saliva-blow-out position and back to normal when the locking means is released, I make novel provision, preferably of the construction now to be described. A pin or stud 28 is rigidly secured in any suitable way, for example by soldering, to the front portion of the tube 15 and projects laterally therefrom, the front portion of the outer tube 10 being provided with a longitudinal slot 29 in the rear end of which said pin or stud 28 is normally held due to the action of the spring 19 forcing said tube 15 rearwardly (see Fig. 4). When the tube 15 is slid forwardly, however, by forwardly pushing the mouth-piece 17, the pin or stud 28 slides to the front end of the slot 29 and is then receivable in an arcuate slot 30 extending substantially throughout half the circumference of the tube 10. Forward sliding of the tube 15 brings its saliva-blow-out port 27 in the same transverse plane with the port 26 of the tube 10, and rotation of said tube 15 with the stud or pin 28 moving in the slot 30, then brings said port 27 into alinement with said port 26. Rotation of the tube 15 to its saliva-blow-out position is limited by striking of the pin or stud 28 against one end wall of the slot 30, and rotation of said tube 15 in back-to-normal direction, is limited by striking of said pin or stud against the other end wall of said slot. In the present disclosure, both the slot 29 and slot 30 open through the forward extremity of the tube 10, although this is of course not essential. One of the portions to which I have referred as an end wall of the slot 30, is shown at 31 and the other at 31a, and while 31 might be considered a portion of one side wall of the slot 29, it seems preferable for purposes of description to consider it as an end wall of slot 30.

It will be seen from the foregoing that novel and advantageous provision has been made for carrying out the objects of the invention. Whenever it is necessary to clean out opening 20, this may be quickly and easily done simply by pushing forwardly upon the mouth-piece 17, causing forward movement of the tube 15 and similar movement of the clean-out pin 21. When accumulated saliva is to be discharged, the tube 10 and parts carried thereby are withdrawn from the pipe stem 11, the mouth-piece 17 is pushed forwardly until the pin or stud 28 will clear the slot 29, and rotation of said mouth-piece 17 in the proper direction, will then serve to rotate the tube 15 to bring its saliva-blow-out port 27 in alinement with the corresponding port 26 of the tube 10. Blowing into the mouth-piece 17 then causes discharges of saliva through the two openings 27 and 26, the check valve 24 being of course held closed by the air pressure. The rotation of the tube 15 to its saliva-blow-out position and back to normal is limited by the slot ends 31a and 31 respectively, and as soon as the pin or stud 28 strikes said end 31, the spring 19 slides the tube 15 rearwardly, again positioning said pin or stud in the rear end of the slot 29 and thus locking the two tubes 15 and 10 against any relative rotation until relatively slid to the required extent.

As excellent results may be obtained from the details shown and described, they are preferably followed. However, attention is again invited to the possibility of making variations within the scope of the invention as claimed. Moreover, while the invention is disclosed in connection with a pipe, it could well be used with a cigar or cigarette holder, simply by inserting the tube 10 into the stem of the holder and providing a suitable mouthpiece on the rear end of the tube 15. The pin 21 could be used to form a draught opening in the rear end of a cigar if the invention be used with a cigar holder, and forward sliding of the tube 15 could be utilized to cause ejection of the cigar butt after smoking. Cigarette butts could, of course, be ejected in the same manner from a cigarette holder associated with the invention.

I claim:—

1. In a smoking device, an outer tube for insertion into a stem, the front end of said outer tube being open, the rear end of said outer tube being provided with a tubular cylindrical enlargement to abut the rear end of the stem, the rear end of said enlargement being open, a second tube slidable in said outer tube and having provision at its rear end for connecting it with a mouth-piece, said rear end of said second tube being provided with a wall which closes the rear end of said cylindrical enlargement and is slidable in said enlargement, the front end of said second tube being provided with a smoke inlet, said front end of said second tube being also provided with a forwardly projecting pin movable forwardly when said second tube is pushed forwardly by forwardly pushing the mouth-piece, a spring in said cylindrical enlargement for yieldably holding said second tube in a normal rearward position, and a stop for limiting the rearward movement of said second tube to said normal position.

2. In a smoking device, an outer tube for insertion into a stem, a smoke-conducting and saliva-collecting tube rotatable in said outer tube and having provision at its rear end for connecting it with a mouth-piece, the upper portion of said smoke-conducting and saliva-collecting tube and the lower portion of said outer tube being provided with saliva-blow-out openings for registration when said tubes are relatively rotated to a predetermined extent, a lateral stud carried rigidly by said smoke-conducting and saliva-collecting tube, and means on said outer tube cooperable with said stud for limiting the relative rotation of said tubes to saliva-blow-out position and back to normal.

3. In a smoking device, an outer tube for insertion into a stem, a smoke-conducting and saliva-collecting tube slidable and rotatable in said outer tube and having provision at its rear end for connecting it with a mouth-piece, the upper portion of said smoke-conducting and saliva-collecting tube and the lower portion of said outer tube being provided with saliva-blow-out openings for alinement when said tubes are relatively slid to a predetermined extent and relatively rotated to a predetermined extent, and coacting means on said tubes for locking said tubes against relative rotation until relatively slid to said predetermined extent and for limiting the relative rotation of said tubes to saliva-blow-out position and back to normal.

4. A structure as specified in claim 3; said means for normally locking said tubes against relative rotation and for limiting their relative rotation comprising a lateral stud on said smoke-conducting and saliva-collecting tube and a slot in said outer tube in which said stud is received.

HENRY D. BELLIN.